LiGHT SKY

www.lightsky.com.cn

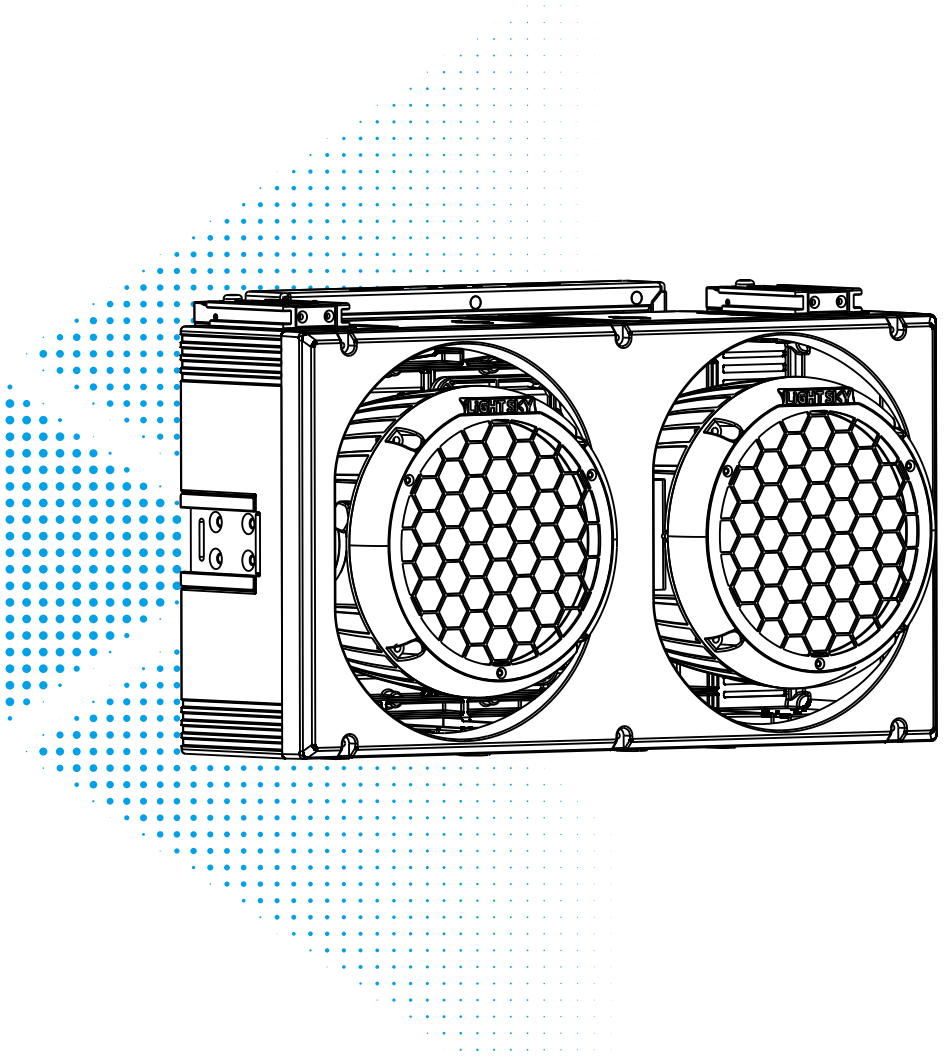

SEAL

User Manual

Please read the instruction carefully before use

Fly Dragon Lighting Equipment Co., Ltd.

Add : NO.4 JINGNENG ROAD 1, HUADU DISTRICT, GUANGZHOU, CHINA.
Tel : 020-61828288 Fax : 020-61828188 Postal Code : 510820
Email : flydragon@lightsky.com.cn

Social Media

LiGHT SKY Wechat

CONTENTS

1. Safety Instructions 2

2. Technical Specifications 5

2.1. Attachment And Size 7

3. Connection and control 10

3.1. Power supply connection 10

3.2. DMX 512 Connection 11

3.3. Control Panel 12

4. How To Set The Unit 13

4.1. Main Function 13

4.2. Address Setting 15

4.3. DMX 512 Configuration 16

5. Electrical Connection Diagram 18

6. Troubleshooting 19

7. Fixture Cleaning 20

8. Duty exonerative and copyright protectio 20

Congratulations on choosing our company product! We thank you for your custom.

- Please keep in mind that this product, like other products of the company, adheres to the concept of people-oriented design and manufacture, and takes product quality as the foundation.
- We put the interests of customers first, and do our best to meet customer requirements.
- Please read this instruction manual carefully and keep it for future reference. In the case of fully understanding the product information, strictly abide by theUse the instruction manual to ensure that the product is installed, used and serviced correctly and safely.
- Our company is not responsible for any damage to lamps or other performance due to personal failure to follow the instructions during installation, use and maintenance.responsibility.
- Our company reserves the right to modify the manual at any time and without prior notice.

1.Safety Instructions

WARNING

Please read the instruction carefully which includes important information about the installation, usage and maintenance.

Please keep this User Manual for future consultation. If you sell the unit to another user, be sure that they also receive this manual.

The following symbols are used to identify important safety information on the product and in this manual:

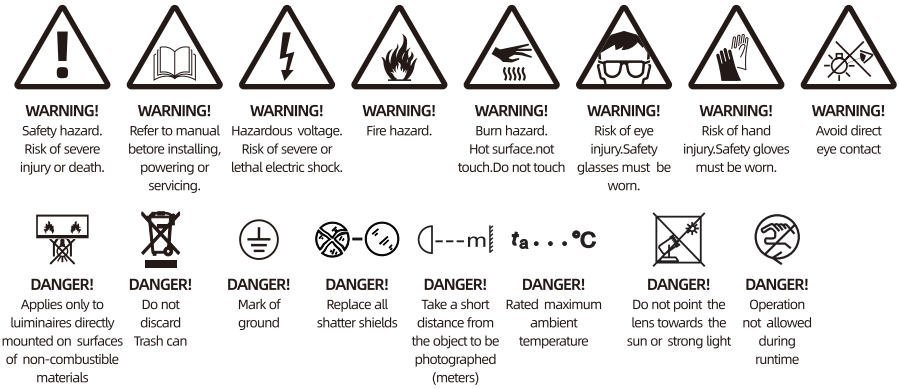

Important:

Damages caused by the disregard of this user manual are not subject to warranty. The dealer will not accept liability for any resulting defects or problems.

— Unpack and check carefully to ensure that there is no transportation damage before using the unit.

— This product is for indoor use only. Use only in a dry location.

— Do install and operate by qualified operator.

— The light source in this luminaire should be replaced by the manufacturer or its service agent or a similarly qualified person, always cut off the power supply before replacing he light source.

— Do not allow children to operate the fixture.

— Use safety chain when fixing the unit. Handle the unit by carrying its base instead of head only.

— The unit must be installed in a location with adequate ventilation, at least 50cm from adjacent surfaces.

— Be sure that no ventilation slots is blocked, otherwise the unit will be overheated.

— Before operation, ensure that you are connecting this product to the proper voltage in accordance with the specifications in this manual or on the product's specification label.
— It's important to ground the yellow/green conductor to earth in order to avoid electric shock.
— Minimum ambient temperature Ta: -20°C. Maximum ambient temperature Ta: 45°C.
— Do not operate this product at a lower or higher temperature.
— Do not connect the device to any dimmer pack.
— When the lamp is running, do not place combustible objects next to it. The shortest distance between the device and inflammable and explosive objects or materials is 1 m.
— Make sure the power cord is not crimped or damaged; replace it immediately if damaged.
— Unit's surface temperature may reach up to 65°C. Do not touch the housing bare-handedduring its operation.
— Avoid any flammable liquids, water or metal from entering the unit. Once it happens, cut off the mains power immediately.
— Do not operate in a dirty or dusty environment. Do clean the fixture regularly.
— Do not touch any wire during operation as there might be a hazard of electric shock.
— Avoid entanglement of the power cord with other wires.
— The distance between the luminaire and the irradiated surface shall be greater than 3 meters.
— Do not shine light directly into another fixture's lens. Intense beam can damage internal components.
— Direct sunlight or any other strong light beam penetrating the front lens of the luminaire can cause severe internal damage. During unpacking, installation, operation, and xtended idle periods outdoors, it is prohibited to expose the front lens of the luminaire to beams of direct sunlight or any other strong light source from any angle.

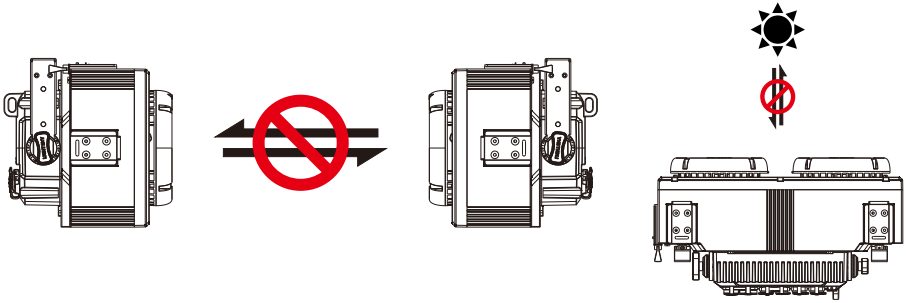

— In the event of serious operating problem, stop using the unit immediately.
— Never turn on and off the unit time after time.
— The housing, the lenses, or the ultraviolet filter must be replaced if they are visibly damaged.

— Do not open the housing as there are no user serviceable parts inside.
— Do not attempt to operate this unit if it becomes damaged. Do not attempt any repairs yourself. Repairs carried out by unskilled people can lead to damage or malfunction. Please contact the nearest authorized technical assistance center if needed.
— Disconnect this product from its power source before servicing.
— Do use the original packaging if the device is to be transported.
— Avoid direct eye exposure to the light source while the product is on.
— Do not operate this product if you see damage on the housing, shields, or cables. Have the damaged parts replaced by an authorized technician at once.

Installation:

The luminaire must be securely fastened to the quick-lock hook with screws to prevent vibration or slipping during operation. The supporting structure must be able to withstand 6 times the weight of the luminaire. Additionally, a safety cable must be installed that can endure 30 free-fall drops from 300mm without failure. Installation should only be performed by qualified professionals, and the luminaire must be mounted in an area inaccessible to unauthorized personnel or away from pedestrian traffic.

2.Technical Specifications

OPTICS

- Light source: 2×230W WRA COB (Warm White, Red, Amber)
- Beam angle: 50 °
- Spot angle: 84.6 °
- Color rendering index: Ra≥93.5
- Color temperature: 2653K ± 250K
- Luminous flux: 21747 lm
- Illuminance: 1160 lx @ 5 m
- Average lifespan of light source: 20000h

EFFECT

- Dimming: Electronic dimming, providing four dimming curves
- Dimming effect: Simulate the response of traditional tungsten filament lamps
- Strobe: 1-30Hz electronic strobe and random strobe

CONTROL AND PROGRAMMING

- Control channels: Standard modes 1CH、2CH、8CH、14CH, See channel table for details
- Control protocols: Standard DMX512 protocol, RDM protocol Art-Net protocol(Optional)、sACN protocol
- Data connection: Three core or five core signal input/output、RJ45 Ethernet port input/output.
- Display: LCD screen

SOFTWARE

- Upgrade software through DMX signal interface
- Intelligent temperature control ensures LED lifespan

POWER SUPPLY AND POWER

- Rated voltage: AC 100-240V 50/60Hz
- Maximum power: 464 W
- Power factor: 0.99
- Maximum current of the lamp: 4.7A/100V 2.1A/220V

SIZE AND WEIGHT

- Product size:438×248×242mm
- N.W.: 11.3 kg
- Carton packaging (Default): 510×320×380mm
- G.W.:14.1

OPTIONAL ACCESSORIES / PACKAGING

- Hook (with Logo): Code: C0499990075 (Suitable for pipes with a diameter of 40-60 mm）
- Hook (Neutral): Code: C0499990021 (Suitable for pipes with a diameter of 40-60 mm)
- Flycase Size(4 units): 960x700x465mm G.W.:79.0kg

OTHER

- Protection level: IP66
- Working environment: -20℃~45℃
- Maximum surface temperature of lamp body: 65 ℃
- Utilizes the iM-Lock™ Mortise-Tenon Locking Connection Structure

APPROVALS

- The product implementation standard: IEC 60598-1、IEC 60598-2-17
- Approved certifications: CE、RoHs
- The product complies with the following EU directives:
  Low Voltage Directive 2014/35/EU . EMC Directive 2014/30/EU

illumination diagram

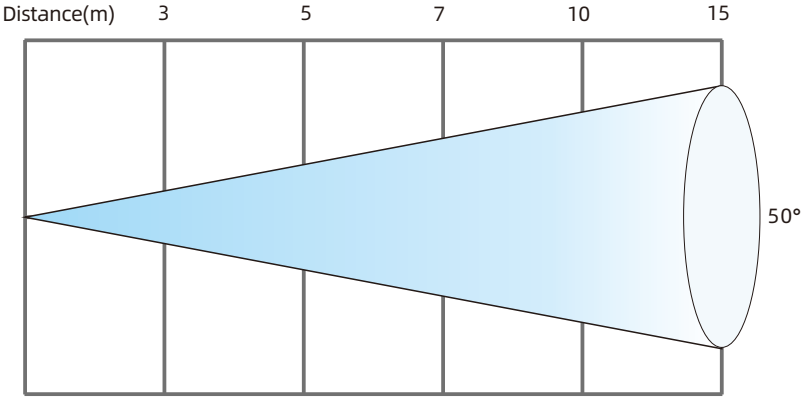

50° lx RAW	3222	1160	592	290	129
lx R	147	53	27	13	6
lx A	236	85	43	21	9
lx W	2917	1050	536	263	117
Diameter(m)	5.46	9.1	11.8	18.2	27.3

2.1.Attachment And Size

Attachment contents-Fig.1



Size-Fig.2 (Unit:mm)

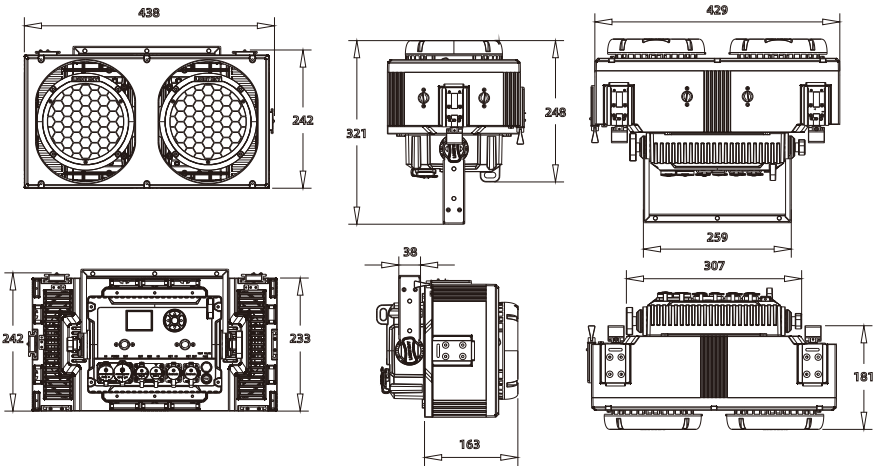

Splicing Guide Diagram 1

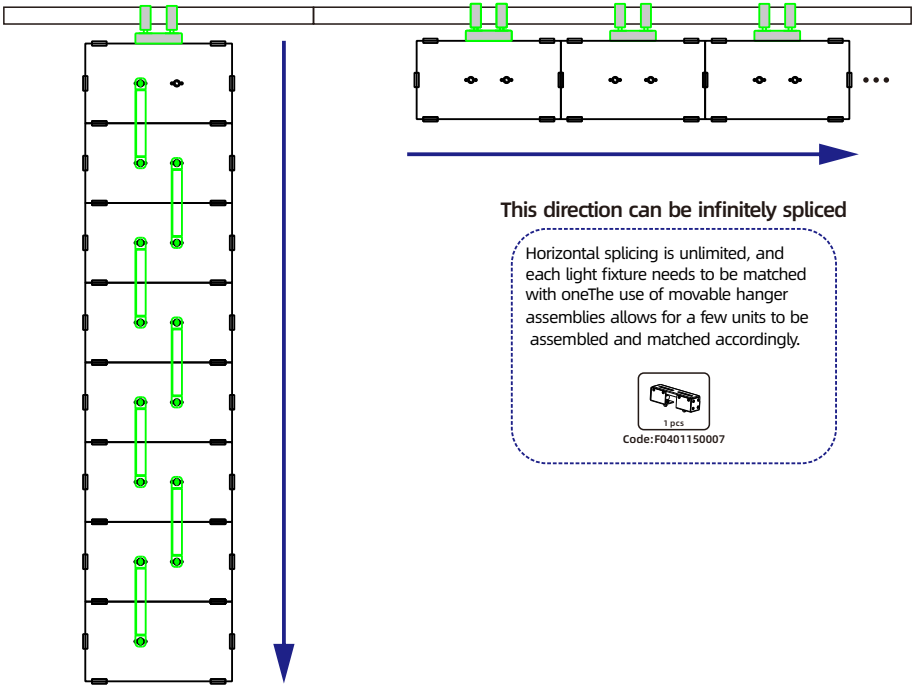

This direction can be infinitely spliced

Horizontal splicing is unlimited, and each light fixture needs to be matched with oneThe use of movable hanger assemblies allows for a few units to be assembled and matched accordingly.

Code:F0401150007

Up to 8 units can be spliced in this direction

Up to 8 units can be assembled for lifting and load-bearing, and 8 lighting fixtures need to be used in conjunction with 1 movable hanger assembly and 7 connecting bracket components B.



Code:F0401150007



Code:F0401260002

Splicing Guide Diagram 2

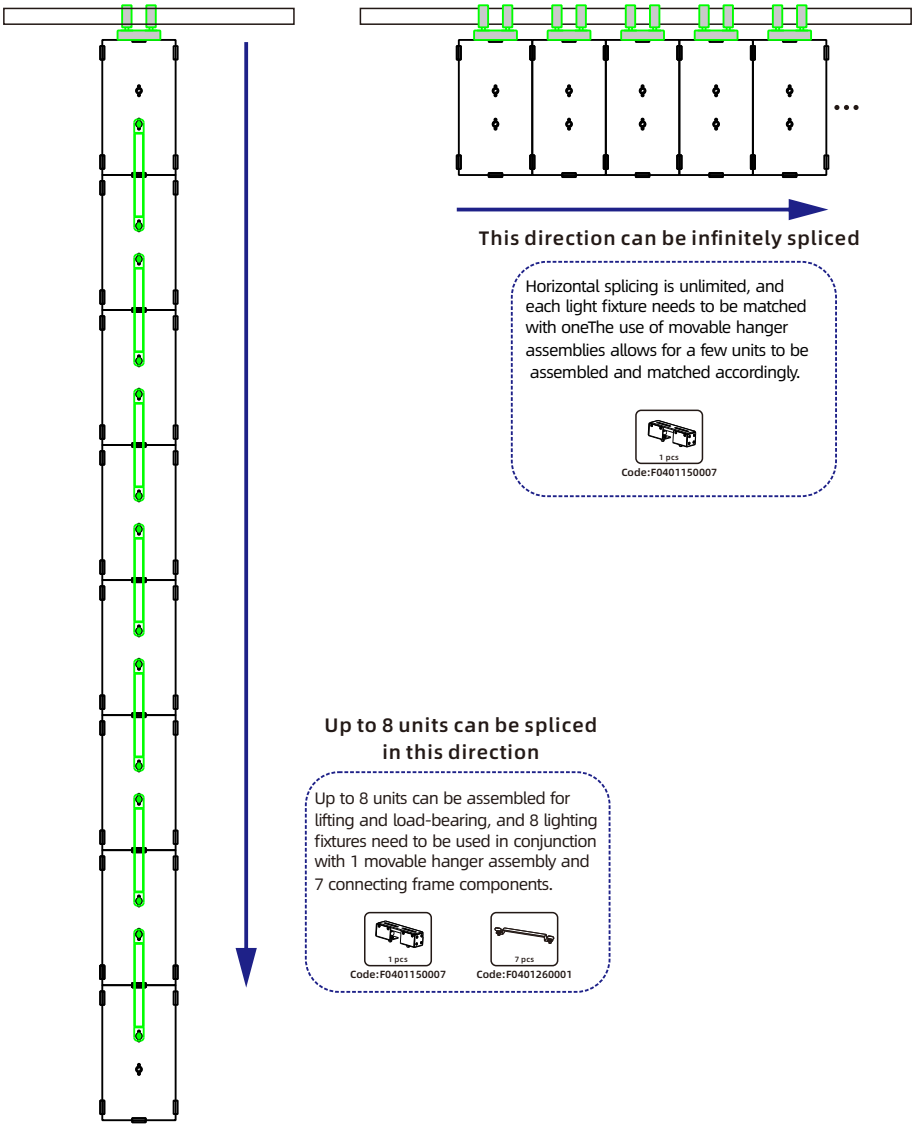

This direction can be infinitely spliced

Horizontal splicing is unlimited, and each light fixture needs to be matched with oneThe use of movable hanger assemblies allows for a few units to be assembled and matched accordingly.

Code:F0401150007

Up to 8 units can be spliced in this direction

Up to 8 units can be assembled for lifting and load-bearing, and 8 lighting fixtures need to be used in conjunction with 1 movable hanger assembly and 7 connecting frame components.

Code:F0401150007

Code:F0401260001

3.Connection and control

3.1.Power supply connection

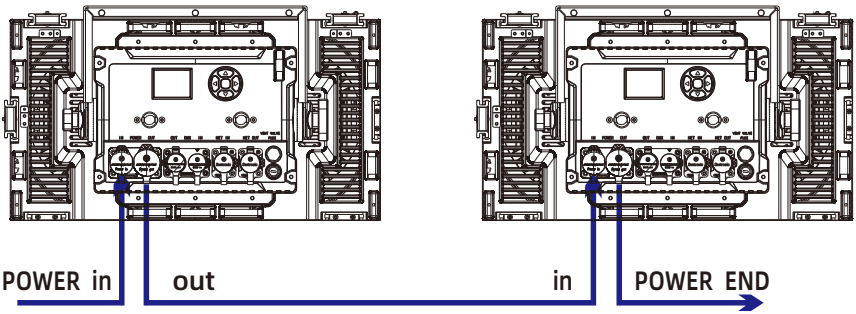

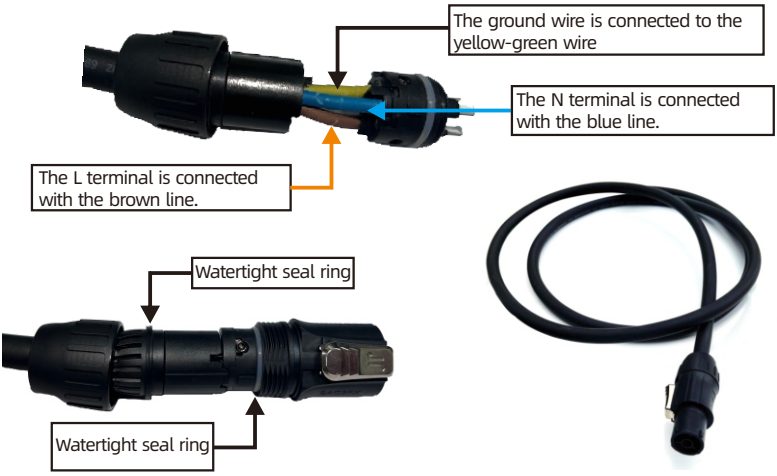

- The bus connecting the power supply must be installed by a qualified professional technician.
- After completing all the above operations and ensuring that it is installed, you can power on the lamp to operate.

3.2.DMX 512 Connection

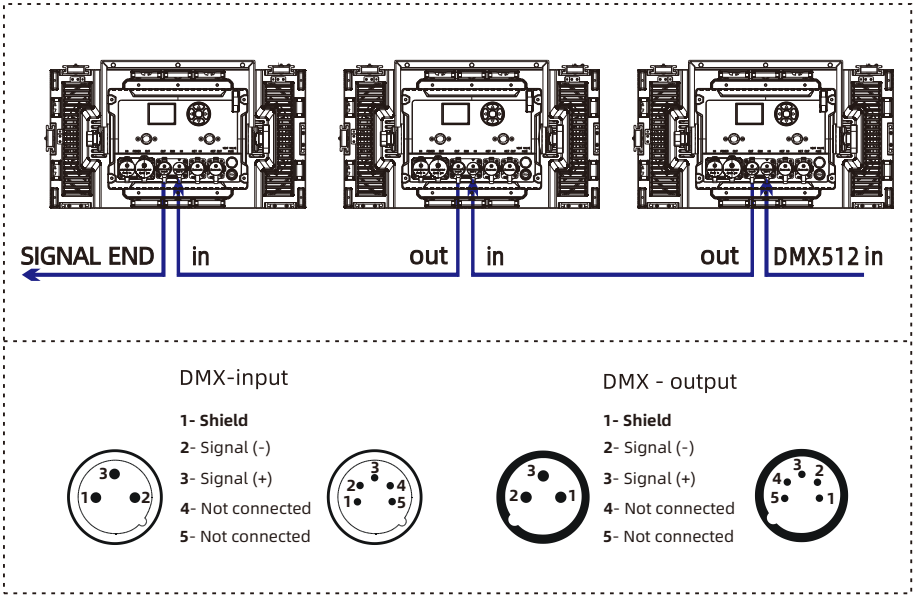

1. At last unit, the DMX cable has to be terminated with a terminator. Solder a 120 Ω 1/4W resistor between pin 2(DMX-) and pin 3(DMX+) into a 3-pin XLR-plug and plug it in the DMX-output of the last unit.
2. Connect the unit together in a "daisy chain" by XLR plug cable from the output of the unit to the input of the next unit. The cable cannot be branched or split to a "Y" cable. DMX 512 is a very high-speed signal. Inadequate or damaged cables, soldered joints or corroded connectors can easily distort the signal and shut down the system.
3. The DMX output and input connectors are pass-through to maintain the DMX circuit, when one of the units' power is disconnected.
4. Each lighting unit needs to have a DMX address to receive the data by the controller. The address number is between 1-512.
5. The end of the DMX 512 system should be terminated to reduce signal errors.
6. 3 pin XLR connectors are more popular than 5 pins XLR.
   3 pin XLR: Pin 1: GND, Pin 2: Negative signal (-), Pin 3: Positive signal (+)
   5 pin XLR: Pin 1: GND, Pin 2: Negative signal (-), Pin 3: Positive signal (+), Pin4, Pin5 not used.

3.3.Control Panel

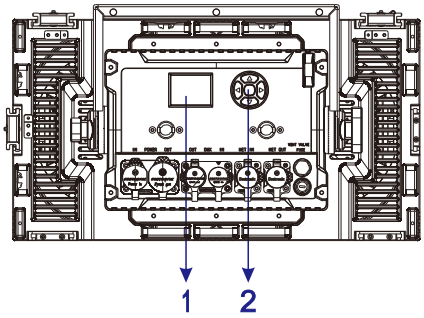

1.Display: To show the various menus and the selected function.

2.Button:

OK	OK confirmation key
▲	UP
▼	DOWN
◀	To the left
▶	To the right

4.How To Set The Unit

4.1.Main Function

When the lamp is powered on and the standby interface is displayed on the screen, press the OK key to enter the preset menu interface, and use the up/down/left/right keys to select the menu. The main functions are as follows:

Main menu	I menu	II menu	III menu	Note
DMX Setting	1.Address	1-512		
	2.Channel	1CH/2CH/8CH (Default) /14CH		
	3.State	Black (Default)		
		Hold		
	4.InputMode	DMX		Art-Net can only be selected when an Art-Net module is installed.
		ARTNET		
		SACN		
	5.DMXAddressLock	OFF /ON (Default)		
Information	1.Time	1.Total Power Time ***		
		2.Power Time ***		
		3.Total Light Time ***		
		4.Light time ***		
	2.Temperature	1.Head1 Temp xx℃		
		2.Head2 Temp xx℃		
		3.Base Temp xx℃		
	3.Historical Temp records	1.Temp records of Head1	1.Temp Max. xx℃ Clear/Retain	
			2.Temp Min. xx℃ Clear/Retain	
		2.Temp records of Head2	1.Temp Max. xx℃ Clear/Retain	
			2.Temp Min. xx℃ Clear/Retain	
		3.Temp records of Base	1.Temp Max. xx℃ Clear/Retain	
			2.Temp Min. xx℃ Clear/Retain	
	4.Fan Information	1.Lamp1FanVol ***		
		2.Lamp1FanSp ***		
		3.Lamp2FanVol ***		
		4.Lamp2FanSp ***		
		5.BaseFanVol ***		
		6.BaseFanSp ***		
	5.Fixture Status	1.MCU(LED) ***		
		2.Lamp1Fan ***		
		3.Lamp2Fan ***		
		4.BaseFan ***		
		5.Head1 Temp ***		
		6.Head2 Temp ***		
		7.Base Temp ***		
	6.RDM UID	3888: xxxxxxxx		
	7.DMX Live	DMX		See the channel table for details.
	8.Software	1.Display Ver. Vxxx		
		2.LED Ver. Vxxx		
		3.ETH Ver. Vxxx		This menu is only displayed when an Art-Net module is connected.
Personality	1.Dimmer&Fan Setting	1.Dimmer Freq.	1800Hz	
			3600Hz (Default)	
			7200Hz	
			25000Hz	
		2.Dimmer Curve	Linear	
			Square (Default)	
			I-Square	
			S-Curve	
		3.Dimmer Speed	Normal (Default)	
			Smooth 1	
			Smooth 2	
			Smooth 3	
		4.Fan Mode	HighOutput	
			Standard (Default)	
			Silent	
	2.Lamp No. Setting	1.Lamp No. Invert	OFF (Default) /ON	
		1.Language	EN (Default) /ZH	

Main menu	I menu	II menu	III menu	Note
	3.Display Setting	2.Dis. Backlight	OFF (Default) /ON	
		3.Dis. Direction	Forward (Default) / Reverse	
		4.Dis.Blink	OFF /ON (Default)	
	4.Ethernet Setting	1.IP Address	***.***.***.***	This menu is only displayed when an Art-Net module is installed.
		2.Mask Address	***.***.***.***	
		3.Universe Address	0-32767	
		4.sACN Universe Address	1-63999	
		5.DHCP	OFF / ON	
		6.Ethernet To DMX	OFF / ON	
Manual	1.Channel	1.*** ***		See the channel table for details.
Service	1.Calibrate	1.L.Warm1 ***		
		2.L.Warm2 ***		
		3.L.Amber ***		
		4.L.Red ***		
		5.R.Warm1 ***		
		6.R.Warm2 ***		
		7.R.Amber ***		
		8.R.Red ***		
	2.Factory Reset	NO / YES	Password : 1111	
	3.Reset Timers	1.Total Power Time	NO / YES	
		2.Total Light Time	NO / YES	
		1.Power Time	NO / YES	
		2.Light Time	NO / YES	
	4.Developer			
	5.Firmware update			
Language				
Test	1.Test Lamp1	Running:Step*/*		
	2.Test Lamp2	Running:Step*/*		
	3.Test All	Running:Step*/*		
Display Rotate				

4.2.Address Setting

Enter MENU, select the DMX setting function, select the address code setting, press the OK button to confirm, the current DMX address will be displayed on the display. Use the up/down buttons to select addresses 001~512, and press the OK button to save. Press the OK button to return to the previous menu.

Please refer to the following diagram to address your DMX512 channel for the first 4 units.

Channel mode	Unit 1 Address	Unit 2 Address	Unit 3 Address	Unit 4 Address
1CH	1	2	3	4
2CH	1	3	5	7
8CH	1	9	17	25
14CH	1	15	29	43

4.3.DMX 512 Configuration

Channel 1CH	Channel 2CH	Channel 8CH	Channel 14CH	DMX VALUE	Function	NOTE
1	/	/	/	0-255	**Halogen**	
/	1	/	/	0-255	**Halogen1**	
/	2	/	/	0-255	**Halogen2**	
/	/	1	1	0-255	**Dimmer**	
/	/	2	2	0-255	**DimmerFine**	
/	/	3	3		**Strobe**	
				0-9	Strobe close	
				10-49	Slow closing，Fast opening，slow → Fast	
				50-89	Fast closing，Slow opening，Slow → Fast	
				90-119	Slow closing，Slow open，Slow → Fast	
				120-179	Random strobe,Slow → Fast	1-25HZ
				180-249	Synchronous strobe,Slow → Fast	1-25HZ
				250-255	Strobe open	
/	/	4	/	0-255	**Warm**	
/	/	5	/	0-255	**Amber**	
/	/	6	/	0-255	**Red**	
/	/	7	/		**Halogen**	
				0-4	No function	
				5-255	Open	
/	/	/	4	0-255	**L.Dimmer**	
/	/	/	5	0-255	**L.Warm**	
/	/	/	6	0-255	**L.Amber**	
/	/	/	7	0-255	**L.Red**	
/	/	/	8		**L.Halogen**	
				0-4	No function	
				5-255	Open	
/	/	/	9	0-255	**R.Dimmer**	
/	/	/	10	0-255	**R.Warm**	
/	/	/	11	0-255	**R.Amber**	
/	/	/	12	0-255	**R.Red**	
/	/	/	13		**R.Halogen**	
				0-4	No function	
				5-255	Open	
					Function(Hold 3s)	
				0-10	No function	
				11-20	Fan HighOutput mode	
				21-30	Fan Standard mode	Default
				31-40	Fan Silent mode	
				41-50	No function	
				51-60	Dis.Blink off	
				61-70	Dis.Blink on	Default

Channel	Channel	Channel	Channel	DMX VALUE	Function	NOTE
1CH	2CH	8CH	14CH			
				71-80	No function	
				81-90	Lamp No. invert off	Default
				91-100	Lamp No. invert on	
				101-110	No function	
				111-120	LED frequency 1.8kHz	
/	/	8	14	121-130	LED frequency 3.6kHz	Default
				131-140	LED frequency 7.2kHz	
				141-150	LED frequency 25kHz	
				151-160	No function	
				161-170	Dimmer curve linear	
				171-180	Dimmer curve square	Default
				181-190	Dimmer curve inv-square	
				191-200	Dimmer curve “S”	
				201-210	No function	
				211-220	Dimmer Smooth 0 /Fast	Default
				221-230	Dimmer Smooth 1 /Medium	
				231-240	Dimmer Smooth 2 /slow	
				241-250	Dimmer Smooth 3 /Halogen(So slow)	
				251-255	No function	

5.Electrical Connection Diagram

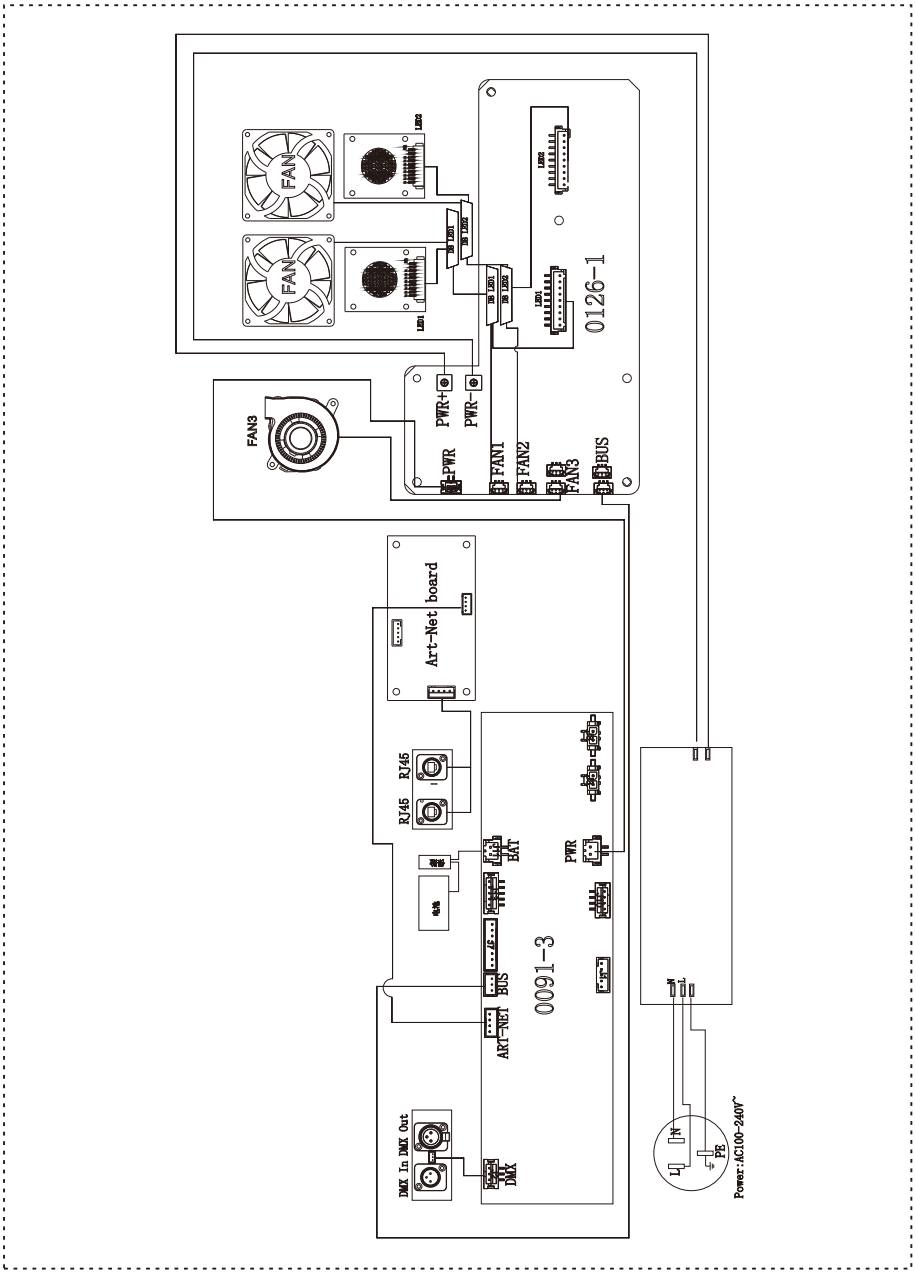

6.Troubleshooting

The following are common faults of lighting fixtures and corresponding solutions. Malfunctions that cannot be repaired by oneself should be handled by personnel with professional qualifications. Before maintaining the lamp, please disconnect the power supply first.

■ LED off:

- Please check if install the suitable voltage
- Please check whether the led will reach the end of their life can explode; please replace a same description led.
- Please check if the power supply is enough.
- Please check whether the DMX 512 controller pass the "turn on" order.

■ The light couldn't accept the control order:

- Please check the start code address and the function option are correct.
- Please check whether the communicate control cable is on good connection or the cable is too long or interrupt.
- Please check the control system is not valid, check the signal amplifier of chain connected is valid.
- Please check whether the communicate cable is too long or the other equipment is mutually conjugate.
- Please arrange the wire well, shorter the signal cable, put the high voltage cable and low voltage cable separately.
- Add the signal amplify isolator.
- Signal cable is used the excellent screening doublet (Resistance 75Ω)
- The end of the light end and the end resistance.

■ The light can't move:

- Please check if the power supply is suitable for the light voltage data.
- Please check the light if they are deformation, inside parts is broken, become wet etc will lead the loose contact.
- Please check the if the iniside lead wire and the connector is loose.
- Please check the electric parts(such as the transformer,PCB board,contrller) is short-circuit or burn down.

7.Fixture Cleaning

It is absolutely essential that the fixture is kept clean to ensure the maximum light-output and allow the fixture to function reliably throughout its life. The fixture must be cleaned regularly to avoid dust, dirt and smoke-fluid residues building up on or within the fixture. The cleaning frequency depends on the application environment. Clean the fixture immediately if the dust enters it to avoid damage to the optical lens due to excessive dust.

- A soft lint-free cloth moistened with any good glass cleaning fluid is recommended, under no circumstances should solvents be used.
- Always dry the parts carefully.
- Clean the external optical lens at least every 20 days .



CAUTION ! ! !

Disconnect from mains before starting maintenance operation.

8.Duty exonerative and copyright protectio

- Light source belongs to consumption products, not within the scope of warranty.
- The manufacturer shall not bear any responsibility for any damage caused by failure to operate in accordance with this instruction.
- The manufacturer reserves the right of final interpretation for all information in this manual. For any questions, please refer to the official website.
- All the information in this manual shall not be copied without permission.
- The data contained in this statement are subject to change in the future without prior notice.